NSS511 Series

Features

■ Lead Free ■ HF ■ RoHS

- Low profile H:1.4mm

Rating	DC4V 0.3A
Storke	2.0±0.15 mm
Operating Force	A→B C→B 150±100 gf B→A B→C 200±150 gf
Contact Resistance	70mΩ max.
Insulation Resistance	DC100V -100MΩ min.
Withstand Voltage	AC500V - 1 minute

Recommended Reflow Soldering Profile

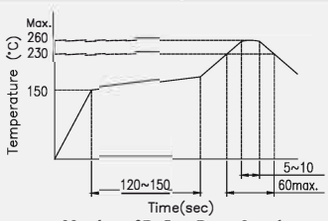

Number of Reflow Pass : 2 cycles

Recommended Manual Soldering Profile

	Temperature	Time
Manual Soldering Temperature	350 ℃ (max.)	3 Sec.(max.)

The solder iron and solder shall be applied at a distance of 1.91 mm to 2.54 mm from the plastic housing.

Durability	10,000 cycles

■ SMT - G Type Horizontal 11.2L x 2.6W x 1.4H
1 Poles 3 Positions

Product No.	Package
NSS511-213F-BBBG1T	3,400 Pcs/Reel

■ Specifications

Timing	Free

■ Outline Drawing

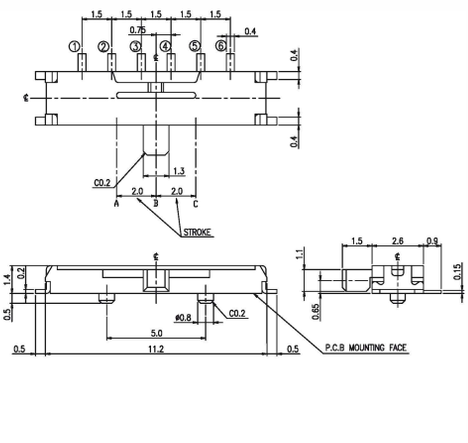

Schematic

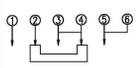

P.C.B Layout

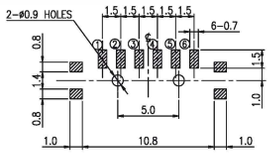

General Tolerance : ±0.2mm.